naturaled®

PROJECT:	
SCHEDULE:	**DATE:**
PREPARE BY:	
NOTES:	

VTL VAPOR TIGHT 4”

DESCRIPTION

naturaLED® linear vapor tight 4-inch is housed in polycarbonate silicon perimeter gasket with brackets for mounting. Engineered for powerful lighting, the IP66-rated LED VaporTight Linear Fixtures are designed to replace fluorescent strip fixtures and can be used in parking garage, corporate campu s, education facility, storage facility, car washes, tunnels and stairwell lighting. Using up to 65% less energy and operating for up to 50,000 average life hours, our fixtures comes with selectable wattages and selectable color temperatures.



ETL SANITATION LISTED
Intertek
For Foodservice Equipment

IP65

APPLICATIONS

Corporate campus, education, healthcare facilities, parking structure, tunnels, car wash, stairwell lighting, meeting rooms, offices, schools, hospitals, hospitalities

3 CCT SELECT

ADJUSTABLE WATTAGE 3

Rated Life Hours 50,000
Warranty 5 Years

FEATURES

- DLC Standard
- IP65 Rated
- ETL / ETL Sanitation Rated
- Wattage & Color Selectable

- Wattage: 15-25W, 30-50W, 70-90W
- Color Temp: CCT3 (35/40/50K)
- Voltage: 120-277V
- Surge Protection: 4KV
- Dimmable: 0-10V
- CRI >80
- Operating temperature: - 40°F - 122°F
- Beam Angle: 120°, Parking Garage
- NEMA 4X
- Designed for maximum operation in commercial environments
- Lighter weight housing for easy installation
- Stainless steel hasps and clips
- Warranty: 5-Year
- Optional Accessories for Purchase: Microwave Motion Sensor, Emergency Driver, Remote Programmer

ACCESSORIES


Microwave Motion Sensor


Emergency Driver


Remote Programmer

SAMPLE NUMBER VTL4/50S/48FR/8C3

SERIES	SIZE	WATTAGE	LENGTH/LENS	TYPE
VTL Vapor Tight Linear	4 4-inch	50S Selectable Wattage <50W	48FR 48-inch Frosted	8C3 CRI 80 CCT Selectable Color Temp 3500/4000/5000K

DLC LISTED · ETL Intertek · ETL Intertek · NEMA 4X · FC · LM 79 · LM 80 · RoHS COMPLIANT · TITLE 24

© 2024 naturaLED® All rights reserved

ORDERING

*P= Premium DLC / *S = Standard DLC

Watts (W)	Ordering Code	Description	CCT (K)	Lumens (Lm)	Length	Equiv. Wattage (W)	Dimmable	IP65 Rating	DLC (S/P)
15	**9709**	VTL4/25S/24FR/8C3	3CCT	2,175	2’	2x32W T8	0-10V	•	S
20			(35/40/50K)	2,900					
25				3,625					
30	**9710**	VTL4/50S/48FR/8C3	3CCT	4,350	4’	2x32W T8	0-10V	•	S
40			(35/40/50K)	5,800					
50				7,250					
70	**9711**	VTL4/90S/96FR/8C3	3CCT	10,150	8’	6x32W T8	0-10V	•	S
80			(35/40/50K)	11,600					
90				13,050					
30	**9712**	VTL4/50S/48PG/8C3	3CCT	3,600	4’	2x32W T8	0-10V	•	S
40			(35/40/50K)	4,800					
50				6,000					

ACCESSORIES (Ordered Separately)

Emergency Driver Kit (60W & 100W)



7336 BAEM4-60BC/MV-A
(4W CEC-Compliant LED Emergency Driver 120-277V
for #9709,9710,9712)



7334 BAEM15-48BC/MV-A
(15W CEC-Compliant LED Emergency Driver 120-277V
for #9711)

Motion Sensor and Remote Control



P10590 SEN-HD027VCR
(Remote Programmable Microwave Motion Sensor
0-10V Bi-Level Internal 12V Low Voltage
(Remote Programmer is required to program it))



P10323 SEN-HD06R
(Remote Programmer)

Surge Protector



P10389 SPD-L-10KV-277
(10KV Surge Protection 120-277V)



P10390 SPD-L-20KV-277
(20KV Surge Protection 120-277V)



P10391 SPD-L-20KV-480
(20KV Surge Protection 347-480V)

© 2024 naturaLED® All rights reserved

DIMENSIONS

2-ft

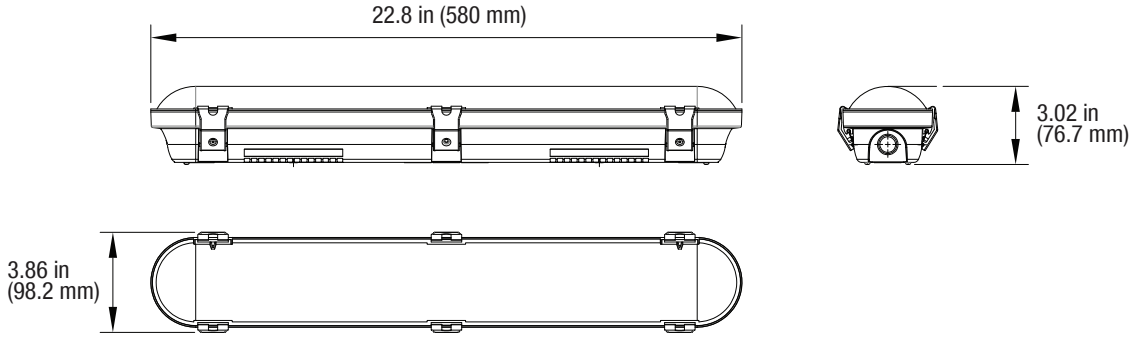

4-ft

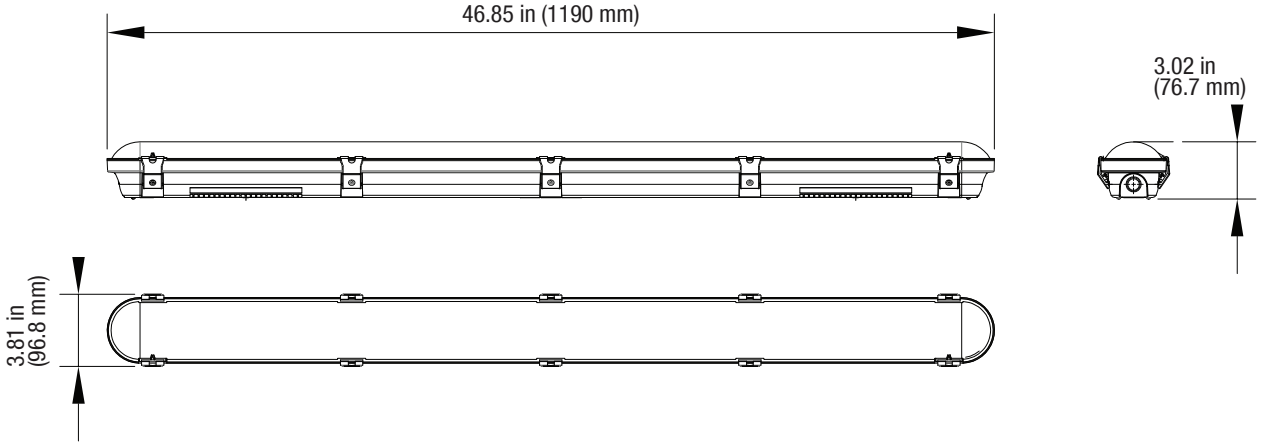

8-ft

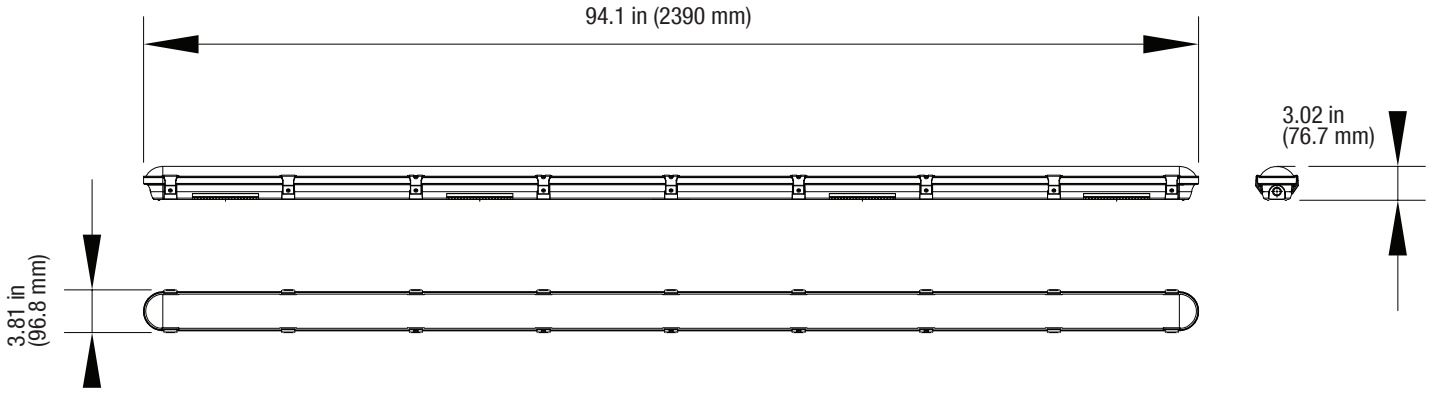

© 2024 naturaLED® All rights reserved

PACKAGE

Case Qty 1 pc

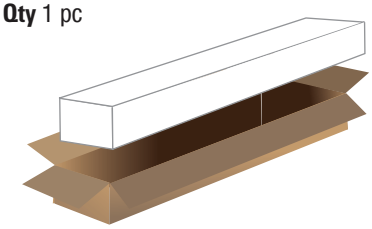

© 2024 naturaLED® All rights reserved