Installation Instructions

ITEM NO. : 60/5891

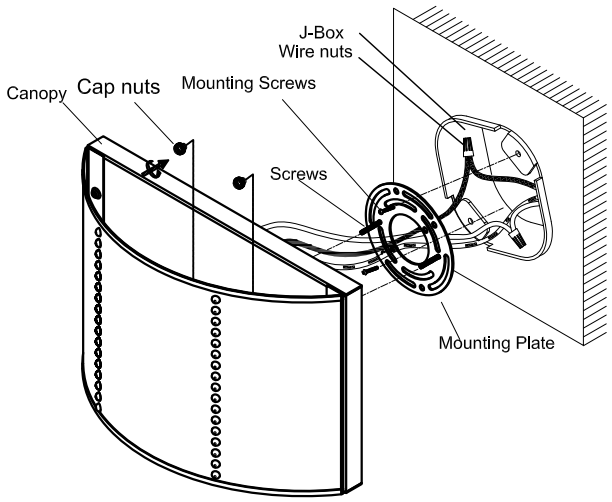

INSTALLATION

1. Shut off main power at circuit breaker before attempting to install luminaire.
2. Install mounting plate to junction box in ceiling using mounting screws.
3. Secure the two screws to the mounting plate. You should leave the proper length of the two screws beyond the surface of the mounting plate to ensure enough thread is available to properly mount the canopy with the Mounting Screws.
4. Pull the existing electrical wires out of the junction box and make proper connections using wire nuts.
5. Position canopy over mounting plate and align holes in canopy with mounting screws . With thread protruding through canopy surface, thread and secure four screws.

WARNING

To ensure the success of the installation,be sure to read these instructions and review the diagrams thoroughly before beginning.

Installation must be performed by a qualified electrician.

Turn off the main power at the circuit breaker before installation,replacing lamp or maintenance.

Use UL listed wire connectors for connections.