KT-FLEDXXPS-R4A-UNV-8CSB-VDIM-X

GENERAL PURPOSE FLOODLIGHT

INSTALLATION INSTRUCTIONS

PLEASE FIND A QUALIFIED ELECTRICIAN FOR INSTALLATION. Please read the instructions before you install and use the fixture.

APPLICATION

Ground, pole/tenon, or building mount applications (building façades, signs, recreational venues, general area lighting)

SAFETY AND ELECTRICAL PARAMETERS

WARNING

- To reduce the risk of death, personal injury, or property damage from fire, electric shock, falling parts, cuts/abrasions, and other hazards, read all warnings and instructions included with and/or the fixture box and fixture labels.
- Before installing, servicing, or performing routine maintenance upon this equipment, follow these general precautions.
- Commercial installation, service, and maintenance of luminaires should be performed by a qualified licensed electrician.
- If you are unsure about the installation or maintenance of the luminaires, consult a qualified licensed electrician. Please abide by all relevant federal, state, and local requirements and regulations when installing this luminaire. Wiring must be in accordance with NEC and all applicable local codes.
- Do not make or alter any holes unnecessarily in an enclosure of wiring or electrical components during the installation.

WARNING

- Turn off electrical power at the fuse or circuit breaker box before wiring fixture to the building power.
- Turn off the electrical power when you perform any maintenance.
- Verify that supply voltage is correct by comparing it with the luminaire label information. Do not install with supply voltage that exceeds the rated input voltage of the luminaire.
- All wiring connections should be capped with UL approved wire connectors.

CAUTION

- Avoid direct eye exposure to the light source while it is on.
- Account for small parts and destroy or recycle packaging material, as these may be hazardous to children.
- Risk of burn. Disconnect power and allow fixture to cool before handling or servicing.

NOTICE

- All fixture installs must be properly grounded.
- Minimum of 75ºC supply conductors.
- Specifications and dimensions subject to change without notice. Consult Keystone with any questions or concerns.
- Fixture is IP65 Rated: Suitable for wet locations.
- Ensure ambient operating temperature between –40ºC/–40ºF to 45ºC/113ºF is maintained. Exceeding these temperature ranges will void warranty and may reduce lifetime or cause performance issues.
- Inspect fixture for any damages before installing. If there is any damage, please do not install and contact Keystone or authorized distributor for resolution.

COMPONENTS INCLUDED IN KIT

Part	Quantity
LED Floodlight	1
Two mounts	1 each

Caution: Before installing, ensure that AC power to the fixture is off.

Caution: The electrical rating of this product is 120–277V. Installer must confirm that there is 120–277V at the fixture before installation.









WIRING DIAGRAMS

GENERAL WIRING DIAGRAM

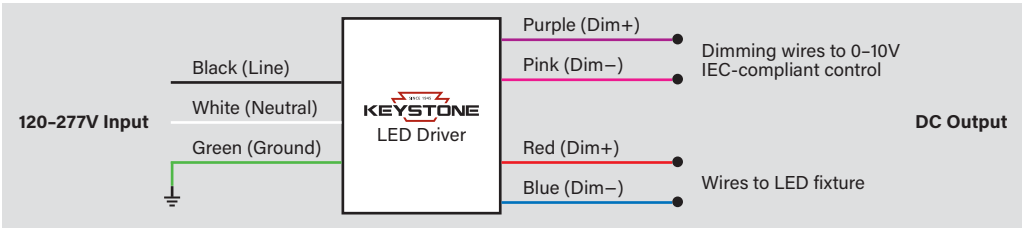

MOUNT WIRING DIAGRAMS

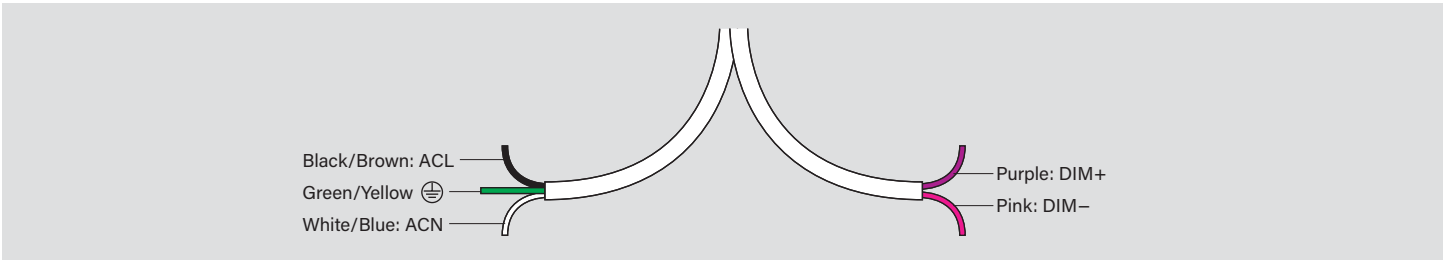

Knuckle Mount Wiring

KT-FLED15PS-R4A-UNV-8CSB-VDIM
KT-FLED15PS-R4A-UNV-8CSB-VDIM-W
KT-FLED35PS-R4A-UNV-8CSB-VDIM
KT-FLED35PS-R4A-UNV-8CSB-VDIM-W
KT-FLED60PS-R4A-UNV-8CSB-VDIM
KT-FLED60PS-R4A-UNV-8CSB-VDIM-W

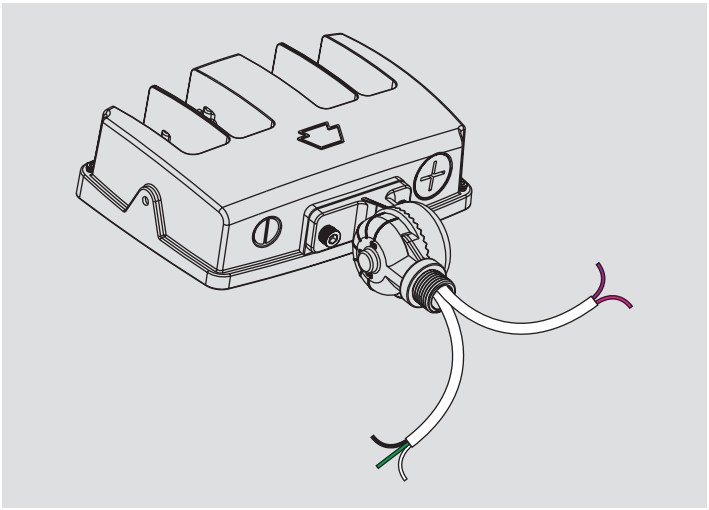

Yoke Mount Wiring

KT-FLED15PS-R4A-UNV-8CSB-VDIM
KT-FLED15PS-R4A-UNV-8CSB-VDIM-W
KT-FLED35PS-R4A-UNV-8CSB-VDIM
KT-FLED35PS-R4A-UNV-8CSB-VDIM-W
KT-FLED60PS-R4A-UNV-8CSB-VDIM
KT-FLED60PS-R4A-UNV-8CSB-VDIM-W

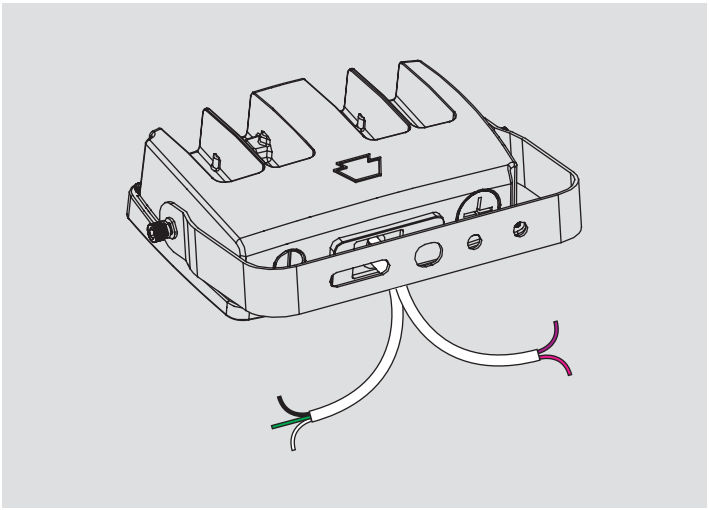

Slipfitter Mount Wiring

KT-FLED75PS-R4A-UNV-8CSB-VDIM
KT-FLED75PS-R4A-UNV-8CSB-VDIM-W
KT-FLED100PS-R4A-UNV-8CSB-VDIM
KT-FLED100PS-R4A-UNV-8CSB-VDIM-W

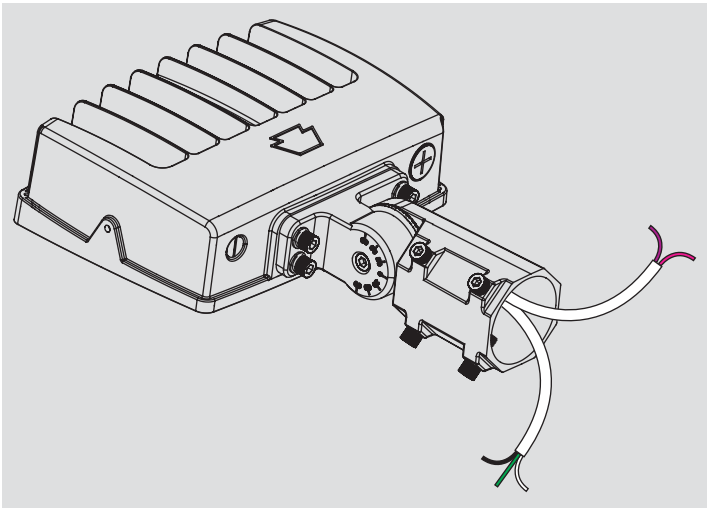

Trunnion Mount Wiring

KT-FLED75PS-R4A-UNV-8CSB-VDIM
KT-FLED75PS-R4A-UNV-8CSB-VDIM-W
KT-FLED100PS-R4A-UNV-8CSB-VDIM
KT-FLED100PS-R4A-UNV-8CSB-VDIM-W

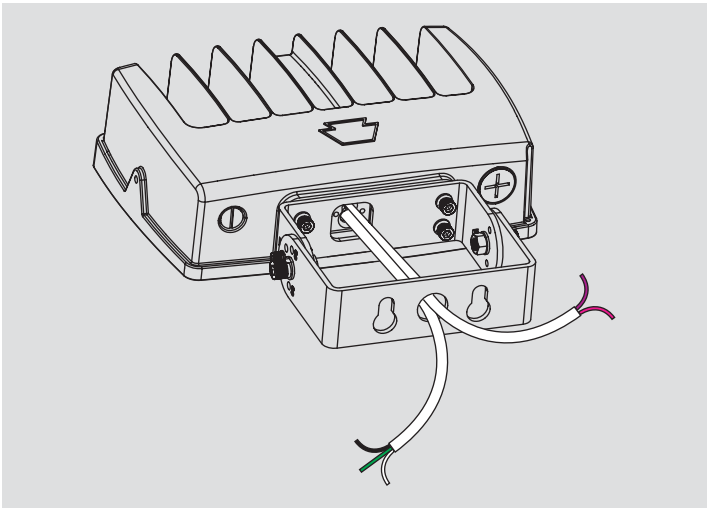

PERFORMANCE SPECIFICATIONS

Catalog Number	Selectable Wattage	Selectable CCT	Lumens	Efficacy	Input Voltage	CRI	Dimming	Mounting	Lifetime	Housing Color	Legacy Equivalent
KT-FLED15PS-R4A-UNV-8CSB-VDIM KT-FLED15PS-R4A-UNV-8CSB-VDIM-W	15W	3000K	1,950	130 lm/W	120–277V	>80	0–10V	Universal: knuckle and yoke mounts included	50,000 hrs	Bronze or white finishes available	70W MH
		4000K	2,250	150 lm/W							
		5000K	2,100	140 lm/W							
	12W	3000K	1,584	132 lm/W							
		4000K	1,836	153 lm/W							
		5000K	1,716	143 lm/W							
	9W	3000K	1,242	138 lm/W							
		4000K	1,404	156 lm/W							
		5000K	1,332	148 lm/W							
KT-FLED35PS-R4A-UNV-8CSB-VDIM KT-FLED35PS-R4A-UNV-8CSB-VDIM-W	35W	3000K	4,550	130 lm/W	120–277V	>80	0–10V	Universal: knuckle and yoke mounts included	50,000 hrs	Bronze or white finishes available	175W MH
		4000K	5,250	150 lm/W							
		5000K	4,900	140 lm/W							
	25W	3000K	3,375	135 lm/W							
		4000K	3,875	155 lm/W							
		5000K	3,625	145 lm/W							
	15W	3000K	2,100	140 lm/W							
		4000K	2,400	160 lm/W							
		5000K	2,250	150 lm/W							
KT-FLED60PS-R4A-UNV-8CSB-VDIM KT-FLED60PS-R4A-UNV-8CSB-VDIM-W	60W	3000K	7,800	130 lm/W	120–277V	>80	0–10V	Universal: knuckle and yoke mounts included	50,000 hrs	Bronze or white finishes available	250W MH
		4000K	9,000	150 lm/W							
		5000K	8,400	140 lm/W							
	50W	3000K	6,650	133 lm/W							
		4000K	7,750	155 lm/W							
		5000K	7,250	145 lm/W							
	40W	3000K	5,600	140 lm/W							
		4000K	6,400	160 lm/W							
		5000K	6,000	150 lm/W							
KT-FLED75PS-R4A-UNV-8CSB-VDIM KT-FLED75PS-R4A-UNV-8CSB-VDIM-W	75W	3000K	9,750	130 lm/W	120–277V	>80	0–10V	Universal: slipfitter and trunnion mounts included	50,000 hrs	Bronze or white finishes available	320W MH
		4000K	11,250	150 lm/W							
		5000K	10,500	140 lm/W							
	60W	3000K	8,280	138 lm/W							
		4000K	9,480	158 lm/W							
		5000K	8,880	148 lm/W							
	45W	3000K	6,390	142 lm/W							
		4000K	7,290	162 lm/W							
		5000K	6,840	152 lm/W							
KT-FLED100PS-R4A-UNV-8CSB-VDIM KT-FLED100PS-R4A-UNV-8CSB-VDIM-W	100W	3000K	13,000	130 lm/W	120–277V	>80	0–10V	Universal: slipfitter and trunnion mounts included	50,000 hrs	Bronze or white finishes available	400W MH
		4000K	15,000	150 lm/W							
		5000K	14,000	140 lm/W							
	90W	3000K	12,150	135 lm/W							
		4000K	13,950	155 lm/W							
		5000K	13,050	145 lm/W							
	80W	3000K	11,200	140 lm/W							
		4000K	12,800	160 lm/W							
		5000K	12,000	150 lm/W							

POWER SELECT (WATTAGE), COLOR SELECT (CCT), AND PHOTOCELL ADJUSTMENT

This fixture is equipped with field-adjustable selectable wattage, selectable CCT, and photocell adjustment technology.

1. Ensure power is off to the fixture.
2. Unscrew the gasketed caps from the top and bottom sides of the fixture as shown in the images below.
3. Adjust dip switches to desired settings. *Note: all fixtures are factory preset to highest wattage, 5000K, and photocell enabled.*
4. Screw on gasketed caps.
5. Restore power to fixture.







Power Select switch for KT-FLED100PS-R4A-UNV-8CSB-VDIM shown. For reference only. Different SKUs will show different wattages.

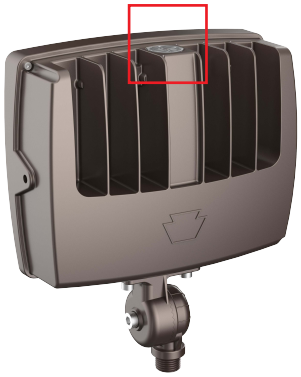



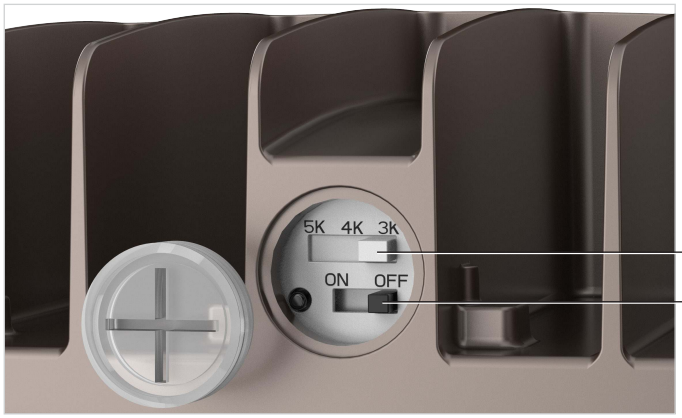

MOUNTING BRACKET OPTIONS (Included)

KNUCKLE MOUNT (Pre-installed)

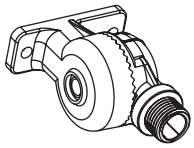

KT-FLED15PS-R4A-UNV-8CSB-VDIM
KT-FLED15PS-R4A-UNV-8CSB-VDIM-W
KT-FLED35PS-R4A-UNV-8CSB-VDIM
KT-FLED35PS-R4A-UNV-8CSB-VDIM-W
KT-FLED60PS-R4A-UNV-8CSB-VDIM
KT-FLED60PS-R4A-UNV-8CSB-VDIM-W

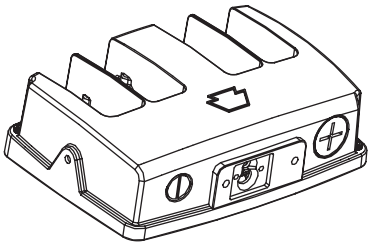

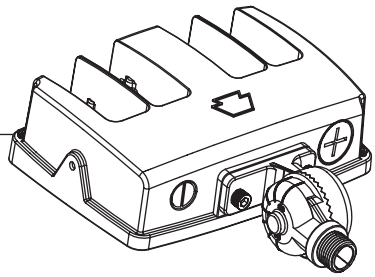

YOKE MOUNT

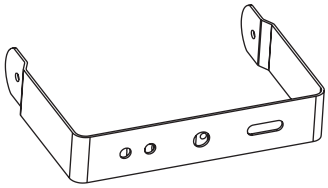

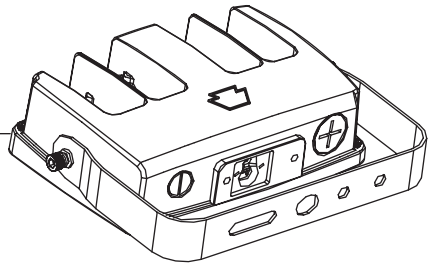

SLIPFITTER MOUNT (Pre-installed)

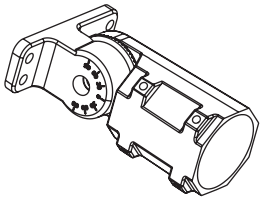

KT-FLED75PS-R4A-UNV-8CSB-VDIM
KT-FLED75PS-R4A-UNV-8CSB-VDIM-W
KT-FLED100PS-R4A-UNV-8CSB-VDIM
KT-FLED100PS-R4A-UNV-8CSB-VDIM-W

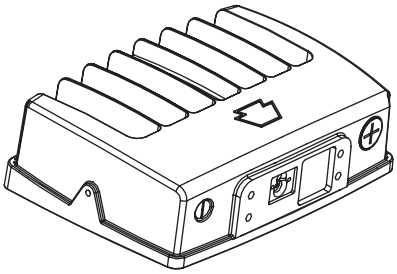

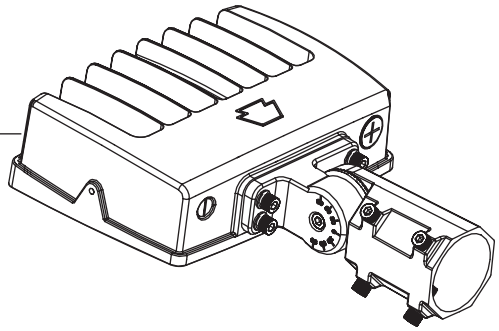

TRUNNION MOUNT

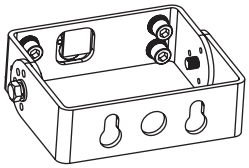

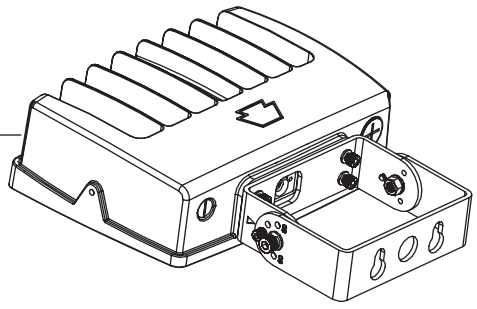

INSTALLATION INSTRUCTIONS

KNUCKLE MOUNT

For use with models:
KT-FLED15PS-R4A-UNV-8CSB-VDIM
KT-FLED15PS-R4A-UNV-8CSB-VDIM-W
KT-FLED35PS-R4A-UNV-8CSB-VDIM
KT-FLED35PS-R4A-UNV-8CSB-VDIM-W
KT-FLED60PS-R4A-UNV-8CSB-VDIM
KT-FLED60PS-R4A-UNV-8CSB-VDIM-W

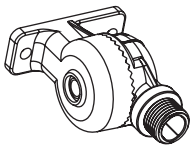

1. Shut off power at the source.

2. Align the gasket on the mount with the fixture opening. Thread fixture wires through left section of mount (*see* ***Wiring Diagrams*** *on page 2*). Affix the gasket on the mount to the fixture opening with screws (provided).

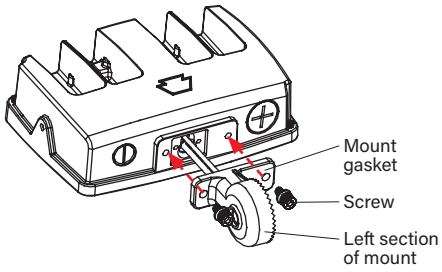

3. Thread wires from left section of mount through right section. Join together left and right mount sections with six-angle screw (provided).

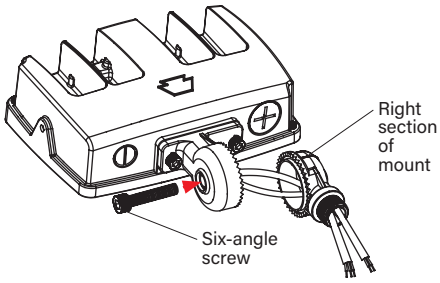

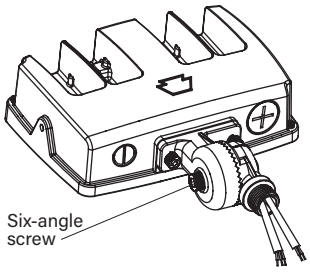

4. To install fixture onto surface, thread wiring from mount though pole or surface. Loosen six-angle screw to adjust fixture angle as desired. Tighten screw.

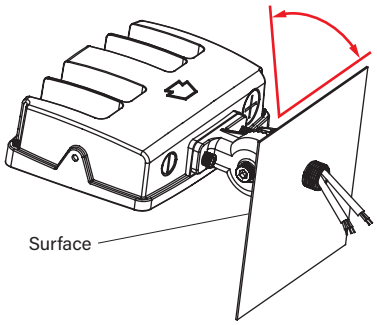

5. Complete wiring connection to power source (*see* ***Wiring Diagrams*** *on page 2*). Reconnect power at source.

(***Installation Instructions*** *continue on next page)*

INSTALLATION INSTRUCTIONS (continued)

YOKE MOUNT

For use with models:
KT-FLED15PS-R4A-UNV-8CSB-VDIM
KT-FLED15PS-R4A-UNV-8CSB-VDIM-W
KT-FLED35PS-R4A-UNV-8CSB-VDIM
KT-FLED35PS-R4A-UNV-8CSB-VDIM-W
KT-FLED60PS-R4A-UNV-8CSB-VDIM
KT-FLED60PS-R4A-UNV-8CSB-VDIM-W

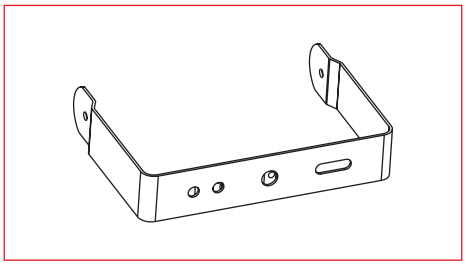

1. Shut off power at the source.

2. Slide yoke mount into position over fixture. Affix mount to fixture with screws (provided).

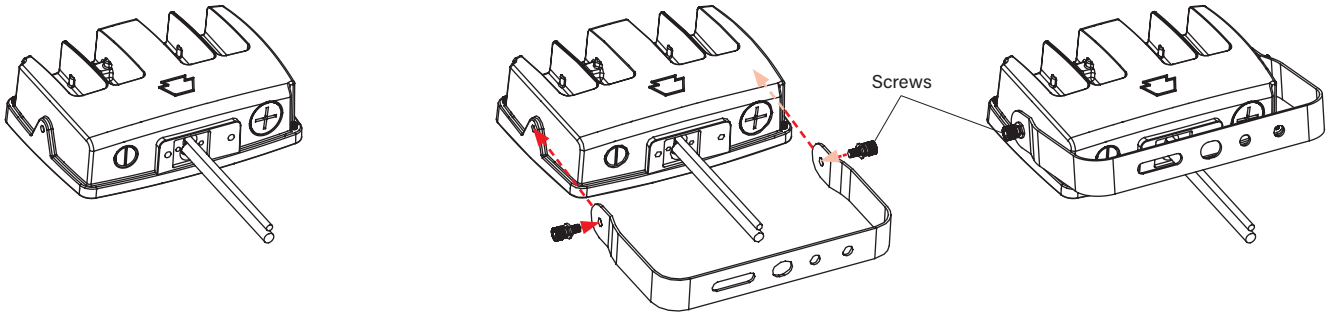

3. To install fixture onto surface, thread wiring from fixture though surface (*see* ***Wiring Diagrams*** *on page 2*). Loosen screws to adjust fixture angle as desired. Tighten screws.

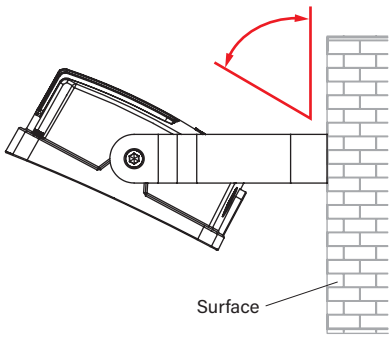

4. Complete wiring connection to power source (*see* ***Wiring Diagrams*** *on page 2*). Reconnect power at source.

(***Installation Instructions*** *continue on next page)*

INSTALLATION INSTRUCTIONS (continued)

SLIPFITTER MOUNT

For use with models:
KT-FLED75PS-R4A-UNV-8CSB-VDIM
KT-FLED75PS-R4A-UNV-8CSB-VDIM-W
KT-FLED100PS-R4A-UNV-8CSB-VDIM
KT-FLED100PS-R4A-UNV-8CSB-VDIM-W

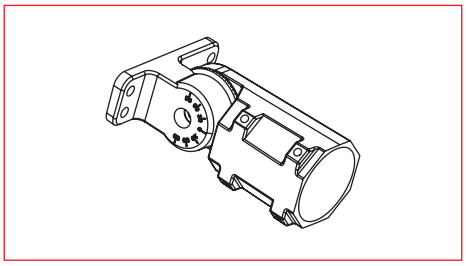

1. Shut off power at the source.

2. Thread fixture wires through left section of mount (*see* ***Wiring Diagrams*** *on page 2*). Affix the gasket on the mount to the fixture opening with screws (provided).

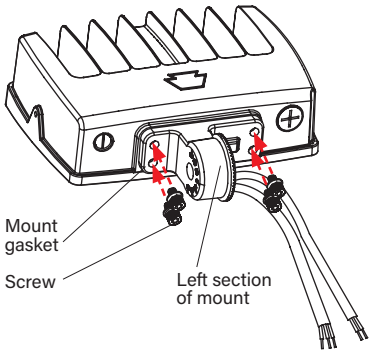

3. Thread wires from left section of mount through right section. Join together left and right mount sections with six-angle screw (provided).

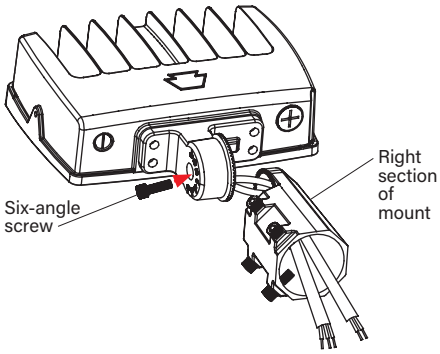

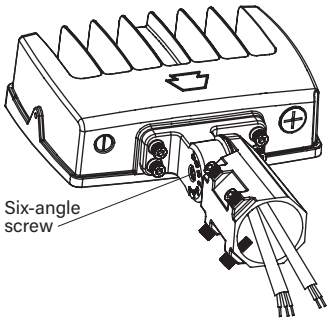

4. To install fixture onto pole or 2 3/8" tenon, thread wiring from the mount through the tenon. Then, loosen the six-angle screw to adjust fixture as desired. Tighten screw.

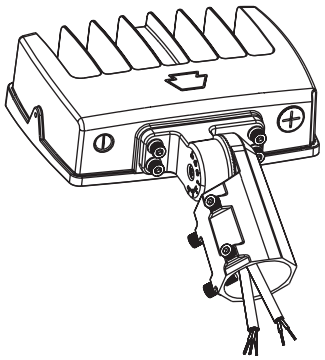

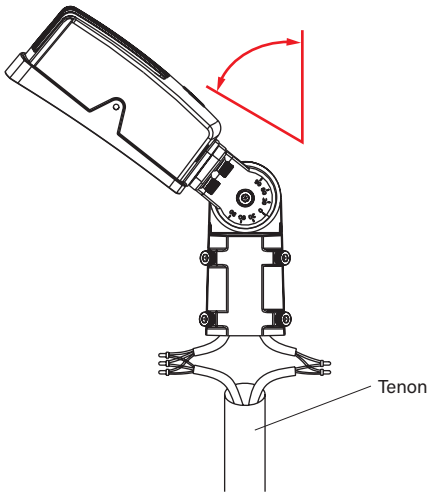

5. Complete wiring connection to power source (*see* ***Wiring Diagrams*** *on page 2*). Reconnect power at source.

(***Installation Instructions*** *continue on next page)*

INSTALLATION INSTRUCTIONS (continued)

TRUNNION MOUNT

For use with models:
KT-FLED75PS-R4A-UNV-8CSB-VDIM
KT-FLED75PS-R4A-UNV-8CSB-VDIM-W
KT-FLED100PS-R4A-UNV-8CSB-VDIM
KT-FLED100PS-R4A-UNV-8CSB-VDIM-W

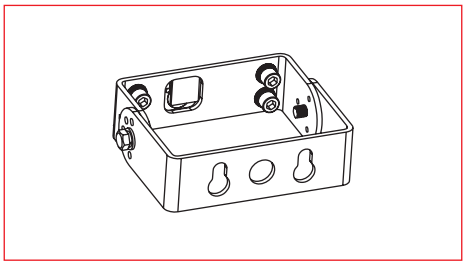

1. Shut off power at the source.

2. Align the opening on the mount with the fixture opening. Thread fixture wires through back section of mount (*see* ***Wiring Diagrams*** *on page 2*). Affix the back section of the mount to the fixture with screws (provided).

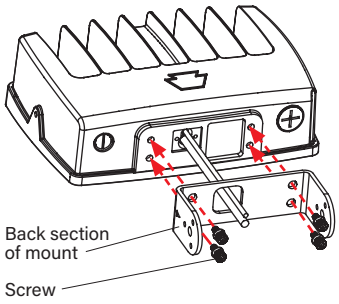

3. Thread wires from back section of mount through front section (*see* ***Wiring Diagrams*** *on page 2*). Join together back and front mount sections with screws (provided).

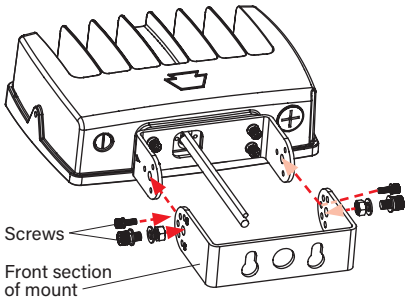

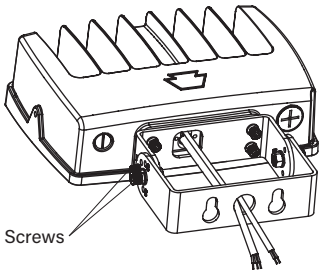

4. To install fixture onto surface, thread wiring from fixture though surface (*see* ***Wiring Diagrams*** *on page 2*). Loosen screws to adjust fixture angle as desired. Tighten screws.

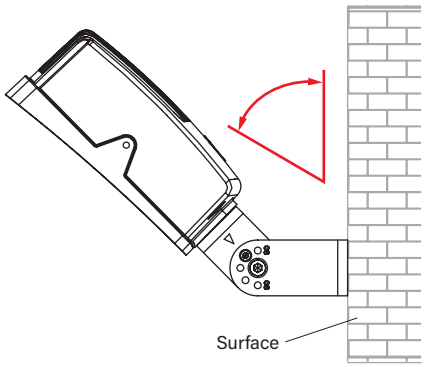

5. Complete wiring connection to power source (*see* ***Wiring Diagrams*** *on page 2*). Reconnect power at source.

ACCESSORIES (sold separately)

SURFACE MOUNT / WALL MOUNT KIT

Catalog Number	Description	UPC	Easy Code
KT-FLED-SM-1-KIT	Surface mount / wall mount kit | Used on series 4 floodlight | Bronze	843654129167	HZJ-35
KT-FLED-SM-1-KIT-W	Surface mount / wall mount kit | Used on series 4 floodlight | White	843654140551	JNW-56



SLIPFITTER MOUNT ADAPTER

Catalog Number	Description	UPC	Easy Code
KT-FLED-SF-1-KIT	Slipfitter mount adapter | Used on 15–60W series 4 floodlight | Bronze	843654153308	TZP-68
KT-FLED-SF-1-KIT-W	Slipfitter mount adapter | Used on 15–60W series 4 floodlight | White	843654153582	JJS-86



KNUCKLE MOUNT

Catalog Number	Description	UPC	Easy Code
KT-FLED-KM-1-KIT	Knuckle mount | Used on 75W and 100W rectangular series 4 floodlight | Bronze	843654146836	JAR-10
KT-FLED-KM-1-KIT-W	Knuckle mount | Used on 75W and 100W rectangular series 4 floodlight | White	843654160931	BWO-02



WIRE GUARD

Catalog Number	Description	UPC	Easy Code
KT-FLED-WG-1-KIT	Wire guard | Used on 15W rectangular series 4 floodlight	843654138824	GEJ-72
KT-FLED-WG-2-KIT	Wire guard | Used on 35W rectangular series 4 floodlight	843654138831	YLC-83
KT-FLED-WG-3-KIT	Wire guard | Used on 60W rectangular series 4 floodlight	843654138848	BME-93
KT-FLED-WG-4-KIT	Wire guard | Used on 75W and 100W rectangular series 4 floodlight	843654138855	EFZ-60

