KT-ALED-WM-1-KIT

WALL MOUNT KIT

DESCRIPTION

Wall Mount Kit | Fits Series 1 and 2 Area Lights | Bronze

**Area Light fixture sold separately*

PHYSICAL SPECIFICATIONS

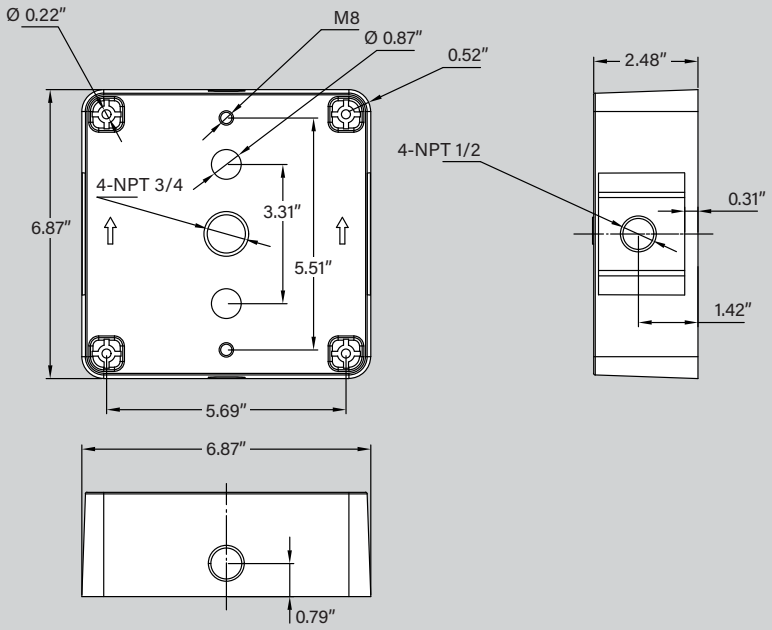

ORDERING INFORMATION

CATALOG NUMBER	EASY CODE	UPC
KT-ALED-WM-1-KIT	QCV-37	843654158952

CATALOG NUMBER BREAKDOWN

KT-ALED-WM-1-KIT

1 2 3 4 5 6

1 **Keystone Technologies**
2 **Area Light Fixture**
3 **LED**
4 **Wall Mount**
5 **Size**
6 **Kit**