Model: LAN4RND/SYNC/SOL/BZ

USE AND CARE GUIDE

SOLAR LED ROUND LANTERN

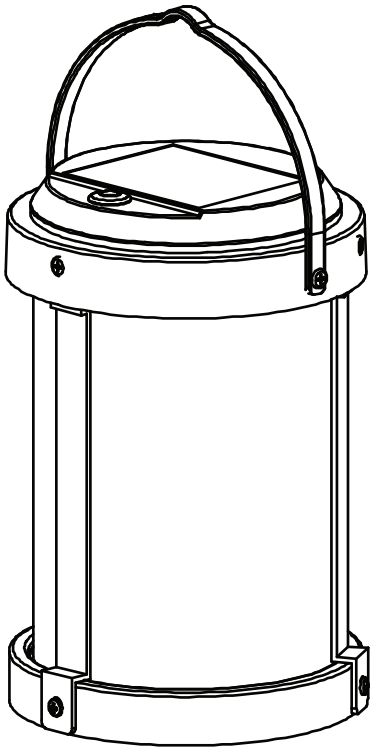

Questions, problems, missing parts?

Before returning to store, visit feit.com/help for further assistance.

24/7 HELP

We appreciate the trust and confidence you have placed in Feit Electric through the purchase of this Solar LED Round Lantern.
We strive to continually create quality products designed to enhance your home. Visit us online to see our full line of products available for your home improvement needs.
Thank you for choosing Feit Electric.

Table of Contents

Table of Contents 2
Safety Information 2
Warranty 2
Pre-Installation 3
Tools Required 3
Hardware Included 3
Installation 4
Operation without Remote 4
Operation with Remote 5
Operation with Smart Bridge 5
Battery replacement 6
Troubleshooting 6

Safety Information

READ BEFORE INSTALLATION AND SAVE THESE INSTRUCTIONS

HOW SOLAR LIGHTS WORK

Solar light has a solar panel that converts sunlight into electricity. During the day, the electricity converted by the solar panel is stored in the rechargeable battery. At night, the solar light is powered by the battery using the electricity stored during the day. The operating time depends on geographical location, daily weather conditions and season.

CHOOSING THE RIGHT LOCATION

Select a location with full, direct sunlight. Do not install in shady areas as these areas will not allow the battery to be fully charged and will reduce nighttime working hours. Be sure that the selected location is not close to other nighttime light sources such as streetlights or porch lights. These light sources may keep the solar lights from turning on automatically.

CAUTION: Contains one 18650 rechargeable lithium-Ion battery. Risk of fire, explosion, or burns. Do not disassemble. Do not crush or damage the battery. Do not heat or incinerate. Do not open or disassemble. Do not make modifications to this product.

WARNING: RISK OF SHOCK. Dispose of used battery promptly according to local recycling or waste regulations. Keep battery out of reach of children and its original package until ready to use. Clean battery contacts and device contacts prior to installing new battery. Ensure that the battery is installed correctly with regard to polarity (+ and -).

DUSK TO DAWN OPERATION:

The light will automatically turn on at dusk and remain on through the night for 6 hours. The light will remain off throughout the day, until dusk.
NOTE: To make sure this function works properly, always have the switch in the 'ON' poistion (including daytime).

FCC STATEMENT

This device complies with part 15 of the FCC Rules. Operation is subject to the following two conditions: (1) This device may not cause harmful interference, and (2) this device must accept any interference received, including interference that may cause undesired operation. Note: This equipment has been tested and found to comply with the limits for a Class B digital device, pursuant to part 15 of the FCC Rules. These limits are designed to provide reasonable protection against harmful interference in a residential installation. This equipment generates, uses and can radiate radio frequency energy and, if not installed and used in accordance with the instructions, may cause harmful interference to radio communications. However, there is no guarantee that interference will not occur in a particular installation. If this equipment does cause harmful interference to radio or television reception, which can be determined by turning the equipment off and on, the user is encouraged to try to correct the interference by one or more of the following measures: Reorient or relocate the receiving antenna. Increase the separation between the equipment and receiver. Connect the equipment into an outlet on a circuit different from that to which the receiver is connected. Consult the dealer or an experienced radio/TV technician for help. Any changes or modifications not expressly approved by the manufacturer could void the user's authority to operate the equipment. CAN ICES-005 (B).

Supplier's Declaration of Conformity:
47 CFR § 2.1077 Compliance Information
Responsible Party:
Feit Electric Company
4901 Gregg Road,
Pico Rivera, CA 90660, USA
Unique Identifier:
LAN4RND/SYNC/SOL/BZ

Limited Warranty

This product is warrantied to be free from defects in workmanship and materials for up to three years from date of purchase. If the product fails within the warranty period, please contact feit electric at info@feit.Com, visit feit.Com/contact-us for instructions on replacement or refund. Replacement or refund is your sole remedy. Except to the extent prohibited by applicable law, any implied warranties are limited in duration to the duration of this warranty. Liability for incidental or consequential damages is hereby expressly excluded. Some states and provinces do not allow the exclusion of incidental or consequential damages, so the above limitation or exclusion may not apply to you. This warranty gives you specific legal rights, and you may also have other rights which vary from state to state or province to province.

Pre-Installation

TOOLS REQUIRED

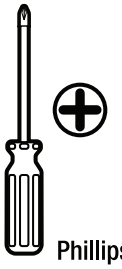

Phillips Screwdriver

HARDWARE INCLUDED

NOTE: Hardware not shown to actual size.

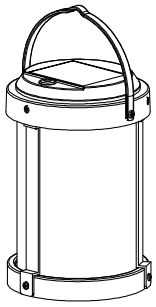

AA

Part	Description	Quantity
AA	4” Solar Lantern	1

Installation

1 Installing the solar lantern

- Place the solar lantern (AA) in the desired location, and ensure that the solar panel is in direct sunlight.
- Can be hung on a Shepherd's Hook (sold separately), or placed on a table or fence post.

IMPORTANT: Remove protective film from solar panel. Charge the solar panel for at least 2 full days by exposing the solar panel face to sunlight.

2 Removing the insulating tab

- The light will not operate without pulling out the plastic insulating tab.

Operation without Remote

This OneSync fixture works independently or with a OneSync Remote or Smart Bridge for grouping and expanded control (sold separately).

1 Turning on the fixture

- Turn the Solar Lantern (AA) on by pressing the button on the top of the fixture.

2 Selecting a Color

- To cycle through the colors, push the button. Colors are: Soft White, Bright White, Cool White, Daylight, Deluxe Daylight, Red, Blue, Green, Yellow, Orange, Purple, Teal, Pink. The lantern will remember the color setting when next turned on.

IMPORTANT: Light brightness is determined by the charge level of the batteries. Brightness will decrease during operation to extend battery life.

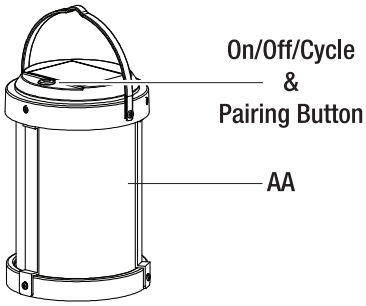

3 Functioning Dusk to Dawn

- The Dusk to Dawn sensor is built into the unit.

DUSK TO DAWN OPERATION:
The light will automatically turn on at dusk and remain on through the night for 6 hours. The light will remain off throughout the day, until dusk.
NOTE: To make sure this function works properly, always have the switch in the 'ON' position (including daytime).

Operation with Remote (sold separately)

Operating with a OneSync remote allows for expanded control. Modify settings of individual OneSync fixtures or multiple fixtures in groups.

The OneSync Remote has a 100ft control range and will command all paired fixtures within 100ft of the remote.

All OneSync fixtures are equipped with a signal repeater that will repeat any remote commands to all other fixtures within 100ft. Placing fixtures within 100ft of at least one other fixture creates a control network and allows for unlimited remote control range, as long as there is a functioning OneSync fixture within 100ft to relay the command.

Example: You can install a OneSync fixture, then another OneSync fixture 100ft away from the first unit. Continue to install 3 more OneSync fixtures in this way so that the last fixture is 500ft away. Using this relay technology, the remote will control the farthest fixture that is 500ft away.

1 Entering pairing mode

- ☐ Hold down the pairing button on the fixture for 3 seconds. Once the solar lantern (AA) starts to blink slowly, it will be in pairing mode for 3 minutes until successfully grouped or timed out.

2 Pairing the remote to the fixture

- ☐ While the solar lantern is in pairing mode, press and hold the desired Groups button (1, 2, 3, 4, 5 or 6) for 3 seconds to pair the Remote to the selected group.

  The light will flash to indicate successful pairing and the fixture will exit pairing mode.

NOTE: A OneSync fixture can be paired to multiple remote groups at once.

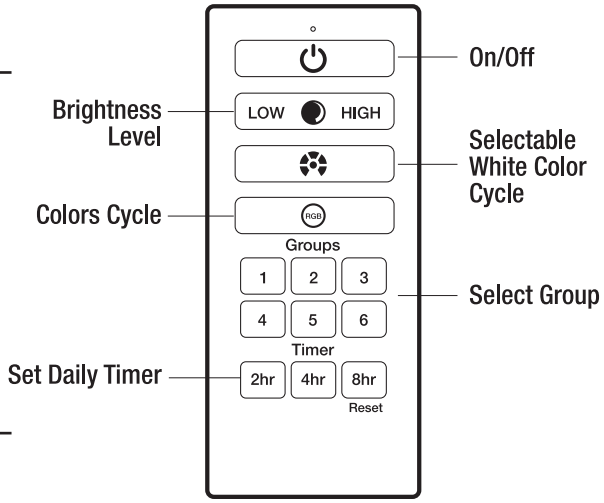

OneSync Remote

3 Unpairing the fixture from the remote

- ☐ To unpair, first follow step 1 so that the fixture is in pairing mode. Once the fixture is in pairing mode, press the group button you wish to unpair from and then hold the remote power button for 3 seconds.

  The light will flash to indicate successful unpairing and the fixture will exit pairing mode.
- ☐ To unpair from all groups at once, hold down the button on the OneSync fixture for 10 seconds. It will flash three times rapidly to indicate that that all groups have been unpaired from the fixture.

NOTE: The remote is equipped with a universal Group #1. To create unique groups, pair using Groups #2-6. All fixtures are pre-paired to the universal Group #1 so that they will immediately respond with any remote Group #1 command. To remove the fixture from the universal group, follow the unpairing instructions in Step 3.

Operation with Smart Bridge

1 Downloading and installing the Feit Electric app

- ☐ Search for the Feit Electric app in the App Store or Google Play Store.
- ☐ Download and Install the Feit Electric app on your smart device.
- ☐ Connect to a 2.4GHz Wi-Fi network that covers your installation location.
- ☐ Follow the instructions in the Feit Electric app & Smart Bridge manual to pair your OneSync lights.

Feit Electric App

Download on the App Store

ANDROID APP ON Google play

WiFi

Only supports 2.4GHz Wi-Fi Networks

Battery Replacement

1 Replacing the battery

- □ To replace the rechargeable battery, remove the lid by unscrewing the (3) lid screws using a Phillips head screwdriver.
- □ Replace with a new lithium-ion 18650 2200mAH 3.7V minimum 5.55 Wh or greater. Install battery correctly with regard to the polarity (+ and -).
- □ Reattach the lid by securing the (3) screws using a Phillips head screwdriver.

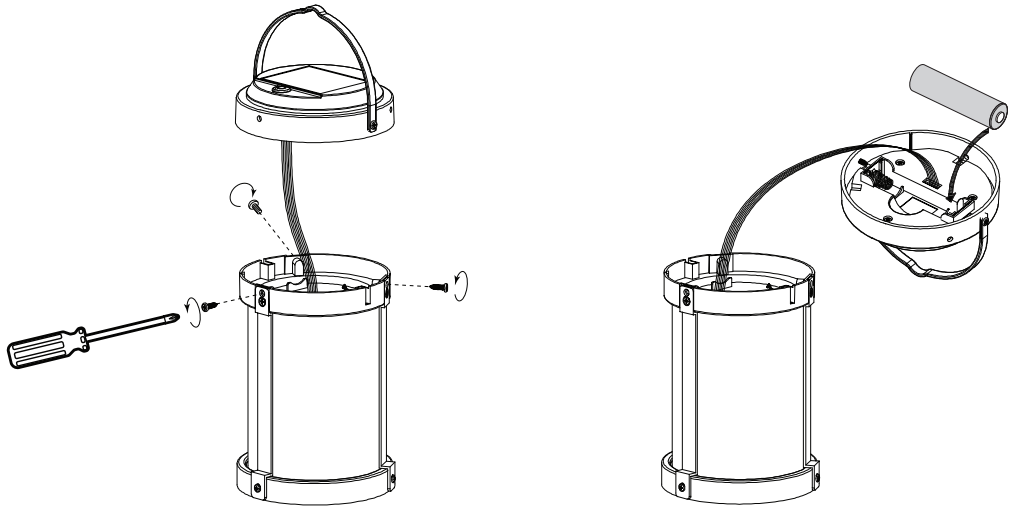

Troubleshooting

PROBLEM	POSSIBLE CAUSES	CORRECTIVE ACTION
The light will not turn on.	The battery is not making contact.	Loosen the battery cover screws, pull out the battery cover and inspect the battery connection. After inspection, reinsert the battery.
	The battery is not fully charged.	Ensure the solar panel is positioned in a location that provides full and direct sunlight. If installed in a shady area, the battery will take a longer time to charge, and may not fully charge, and reduce working hours.
	The panel is near an external light source that is inadvertently triggering the dusk to dawn sensor.	Relocate the fixture to an area that does not have any external light sources or remove the external light sources from the panel's proximity.
The lights go out too early.	The battery charge is low.	Allow the batteries to get a full charge by powering off the fixture for 1-2 days. Or relocate the fixture to an area with direct sunlight. Check panel for dirt, damage, or light obstruction.

Questions, problems, missing parts?

Before returning to store, visit feit.com/help for further assistance.

24/7 HELP